# SURFACE MOUNT CRYSTAL FCX-02

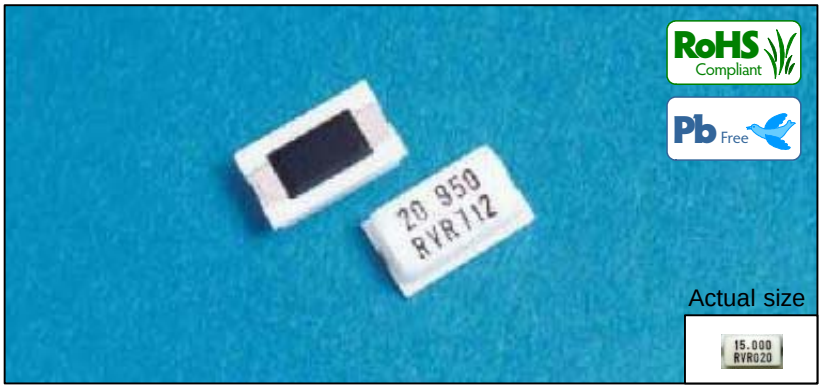


## Features

- Compact design (8.0mm×4.5mm×2.0mm Max., Weight：0.17g).
- Resin sealed ceramic package assures extreme accuracy and high reliability.
- Lead-free soldering is available.
- Tight Frequency Tolerance Option(±10ppm).
- Applications：Laptop PC, DSC, DVC

## Dimensions

Unit：mm

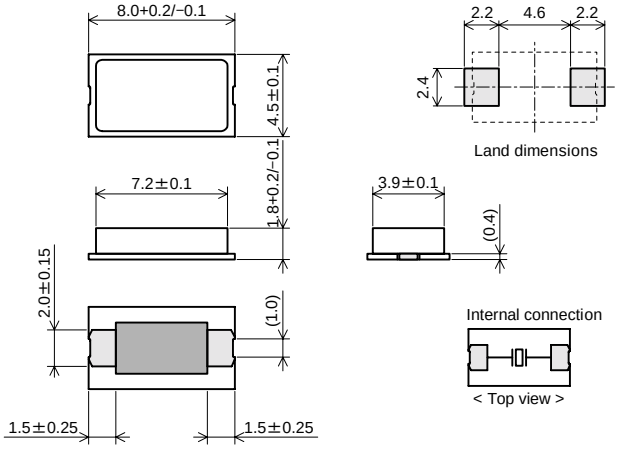


## Specifications

| Item | Standard specifications | | | |
|---|---|---|---|---|
| Frequency range(MHz) | 6.0 to 40.0 | | | |
| Overtone order | Fundamental | | | |
| Frequency tolerance (ppm)(at 25°C) | ±15, ±30, ±50, ±100 | | | |
| Storage temperature range(°C) | −40 to +85 | | | |
| Operating temperature range(°C) | 0 to +50 | −10 to +60 | −20 to +70 | −40 to +85 |
| Frequency versus temperature characteristics(ppm) (Refer to 25°C) | ±10<br>±30<br>±50<br>±100 | ±15<br>±30<br>±50<br>±100 | ±20<br>±30<br>±50<br>±100 | ±30<br>±50<br>±100 |
| Motional resistance (ESR) | As per below table | | | |
| Level of drive(μW) | 500 Max. | | | |
| Load capacitance(pF) | 8.0, 10.0 | | | |

| Frequency(MHz) | Motional resistance(ESR)(Ω) |
|---|---|
| 6.0 to 8.0 | 150 Max. |
| 8.0 to 10.0 | 100 Max. |
| 10.0 to 12.0 | 80 Max. |
| 12.0 to 40.0 | 50 Max. |

- Please consult us for customized specifications.
- All specfications and markings subjected to change without notice.

## Taping

Unit：mm

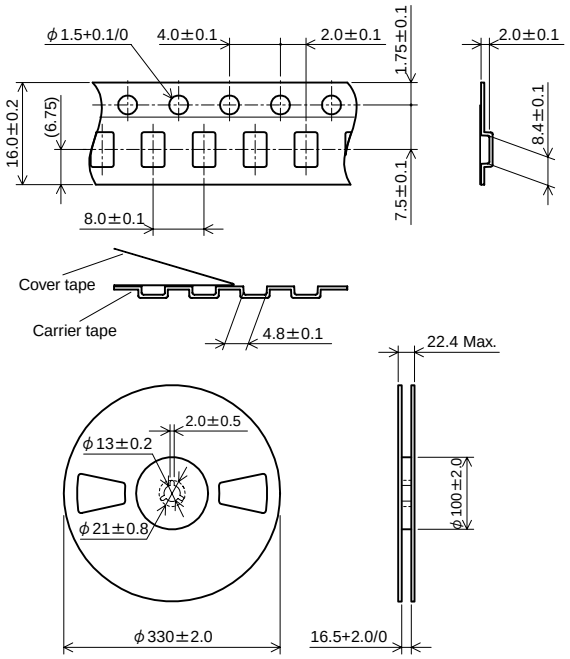


Quantity：3000 pieces Max./Reel


RIVER

RIVER ELETEC CORPORATION

URL http://www.river-ele.co.jp

Head Office : 2-1-1 Fujimigaoka Nirasaki Yamanashi Japan
Tokyo Office : 4-40-14 Nishishinjuku Shinjuku-ku Tokyo Japan
Utsunomiya Office : Phone 81-28-625-7181 Fax 81-28-625-7159
Osaka Office : Phone 81-6-6998-4888 Fax 81-6-6998-4899
Nagoya Office : Phone 81-52-776-9531 Fax 81-52-776-9532

Phone 81-551-22-1211 Fax 81-551-22-6645
Phone 81-3-3377-5444 Fax 81-3-3374-2865
River Electronics (Singapore) Pte.Ltd : Phone 65-6258-7874 Fax 65-6258-7366
(USA Liaison Office) : Phone 1-408-236-7410 Fax 1-408-236-7411
(Shanghai Liaison Office) : Phone 86-21-64032210 Fax 86-21-64037412
Taiwan River Co.,Ltd. : Phone 886-2-8988-2811 Fax 886-2-2983-4785